CODEL DOORS

INTERIOR DOORS
MOLDED COLLECTION

MONROE® SMOOTH 8'-0"

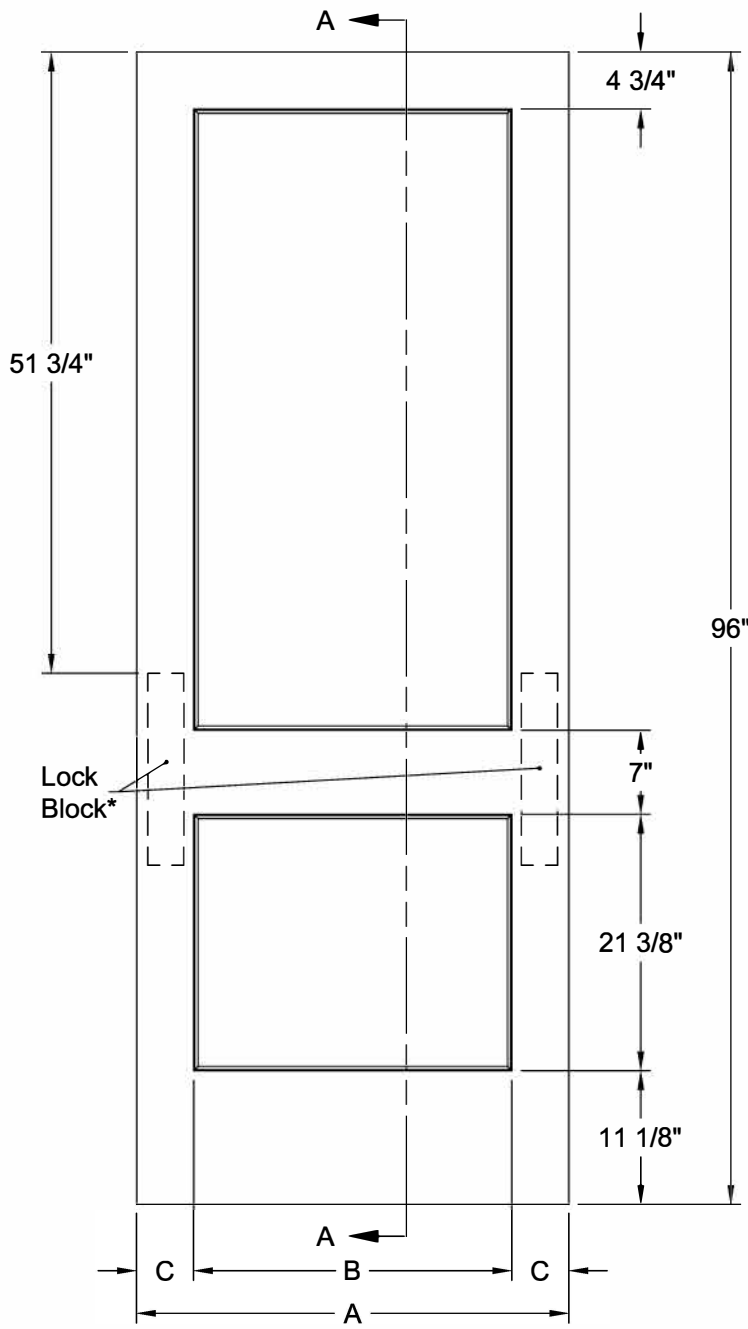

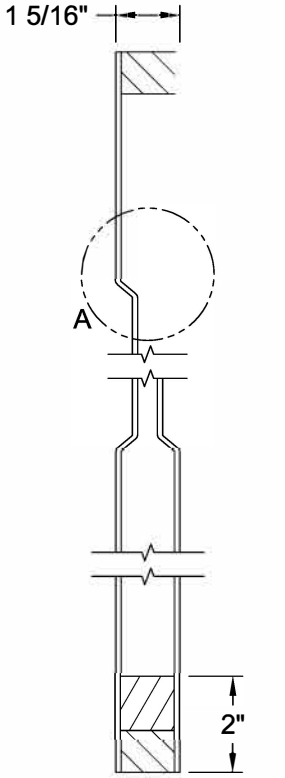

Section A-A

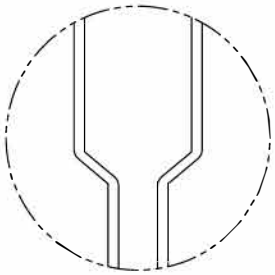

Detail A
Monroe Profile

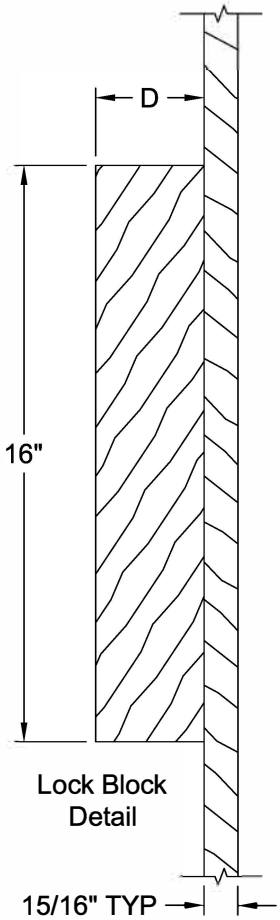

Lock Block
Detail

Dimension Table				
Door Size	A	B	C	D
3'-0" x 8'-0"	36"	26 1/2"	4 3/4"	3"
2'-10" x 8'-0"	34"	22 1/2"	5 3/4"	3"
2'-8" x 8'-0"	32"	22 1/2"	4 3/4"	3"
2'-6" x 8'-0"	30"	20 1/2"	4 3/4"	3"
2'-4" x 8'-0"	28"	18 1/2"	4 3/4"	3"
2'-2" x 8'-0"	26"	15 1/2"	5 1/4"	3"
2'-0" x 8'-0"	24"	15 1/2"	4 1/4"	3"
1'-10" x 8'-0"	22"	11 1/2"	5 1/4"	3"
1'-8" x 8'-0"	20"	11 1/2"	4 1/4"	3"
1'-6" x 8'-0"	18"	9 1/4"	4 3/8"	3"
1'-4" x 8'-0"	16"	9 1/4"	3 3/8"	2 1/8"

* Number and size of Lock Blocks may vary by model and customer selection.
Please specify at time of ordering.

Scale: 3/4" = 1'-0"